Reducing ADC Count in Fully-Digital Arrays without Losing Degrees of Freedom.

Sampling thousands of mmW receivers is a difficult challenge

Arjuna Madanayake, Najath Akram, Viduneth Ariyarathna, Soumyajit Mandal, and Ted Rappaport
Florida International University, Case Western Reserve University, and New York University

Multi-dimensional signal processing

A signal with direction of arrival (DOA) of ψ (a) where $-\frac{\pi}{2} \le \psi \le \frac{\pi}{2}$ maps to an angle of Θ in the 2D frequency domain (b).

$$\tan \Theta = \sin \psi$$

Antennas are directive and have a constrained radiation pattern and act like a spatial lowpass filter (c).

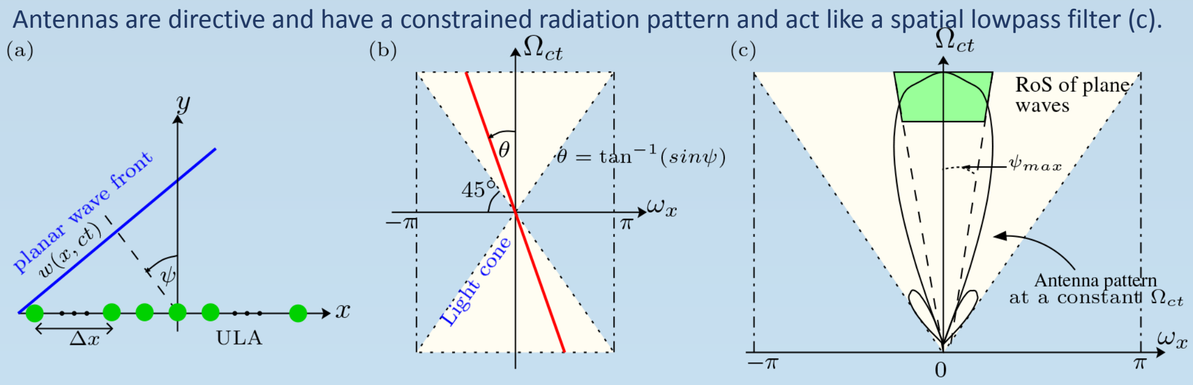

Antenna power pattern is constrained to $-\psi_{max} \le \psi \le -\psi_{max}$, the gain is much lower for $|\psi| \le \psi_{max}$.

Traditional architecture of wideband receivers

Typical systems need N ADCs for an N-element array.

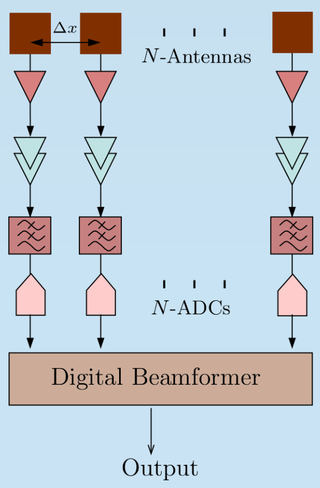

Proposed architecture

Signals are spatially filtered and are constrained to a narrower cone shaped region..

The vacant space utilized to reduce the number of ADCs.

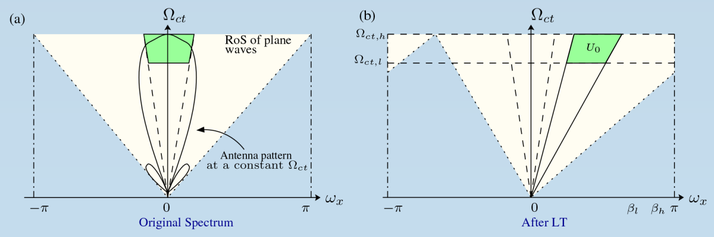

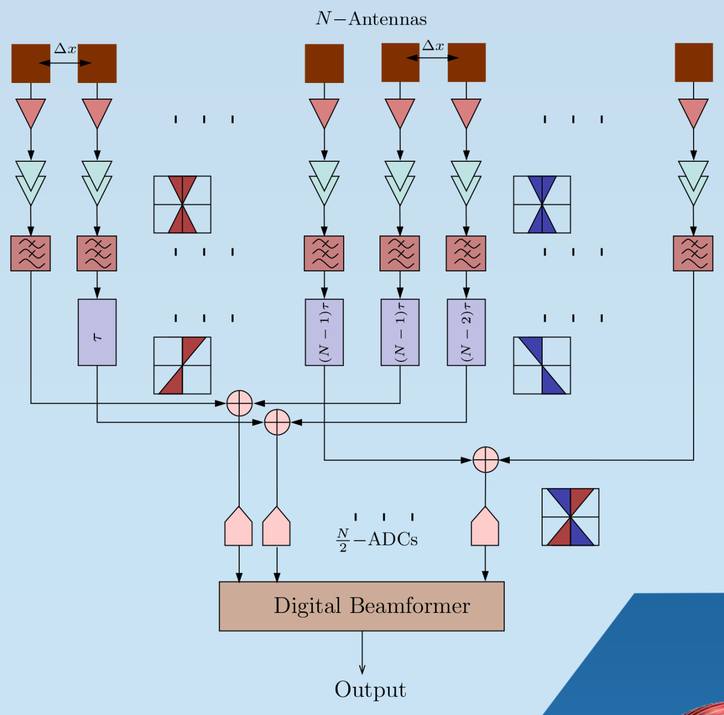

Implementation of the proposed architecture.

Reduces the ADC requirement down to N/2 for an N-element array.

Mathematical background

Derivation and interference modeling

Let, $W_m(\omega)$ is the mixed domain 2D Fourier spectrum of $w_m(u)$, $\omega = [\omega_x, \Omega_{ct}]^T$ and $u = [n_x, ct]^T$

Fourier spectrum of $w_m(\mathbf{V}u)$ where V is an invertible 2 x 2 matrix is given by, $w_m(\mathbf{V}u) \overset{\mathcal{F}}{\Rightarrow} \frac{W_m(\mathbf{V}^{-T}\omega)}{|\det V|}$

Making $\mathbf{V} = \begin{bmatrix} 1 & 0 \\ -c\tau & 1 \end{bmatrix}$, introduces a $n_x\tau$; $\tau \epsilon \mathbb{R}$ delay to the signal at each spatial sample location n_x. τ depends on $\frac{\Delta x \sin \psi_{max}}{c}$.

Introduced interference energy on j[th] sub-array due to the transform of L arrays is:

$$I_j = \frac{1}{4\pi^2} \iint_{U_j} \left| \sum_{\substack{k=0 \\ k \neq j}}^{L-1} \left[\frac{1}{|\det \mathbf{V_k}|} W_{m,k}(\mathbf{V_k}^{-\top}\omega) \Psi_k(\mathbf{V_k}^{-\top}\omega) \right] \right|^2 d\omega_x d\Omega_{ct}$$

$S_{m,k}(\omega) = W_{m,k}(\omega)\Psi(\omega)$;
$\Psi(\omega)$ is the 2D spectral radiation pattern.

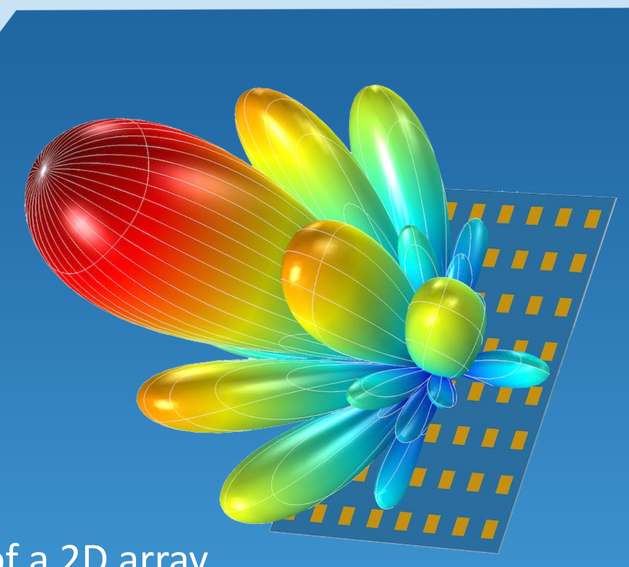

3D beam pattern of a 2D array

Implementation on dual polarization arrays

Array systems operating over wide bandwidths often require cross-polarized elements that are orthogonal in a spatial plane in order to receive the horizontal and vertical electric field components.

Typical systems need $2N$ ADCs for an N element dual polarization array.

The proposed method reduces the ADC requirement by 50% by exploiting MD signal processing.

The architecture and simulation results are shown in the figure.

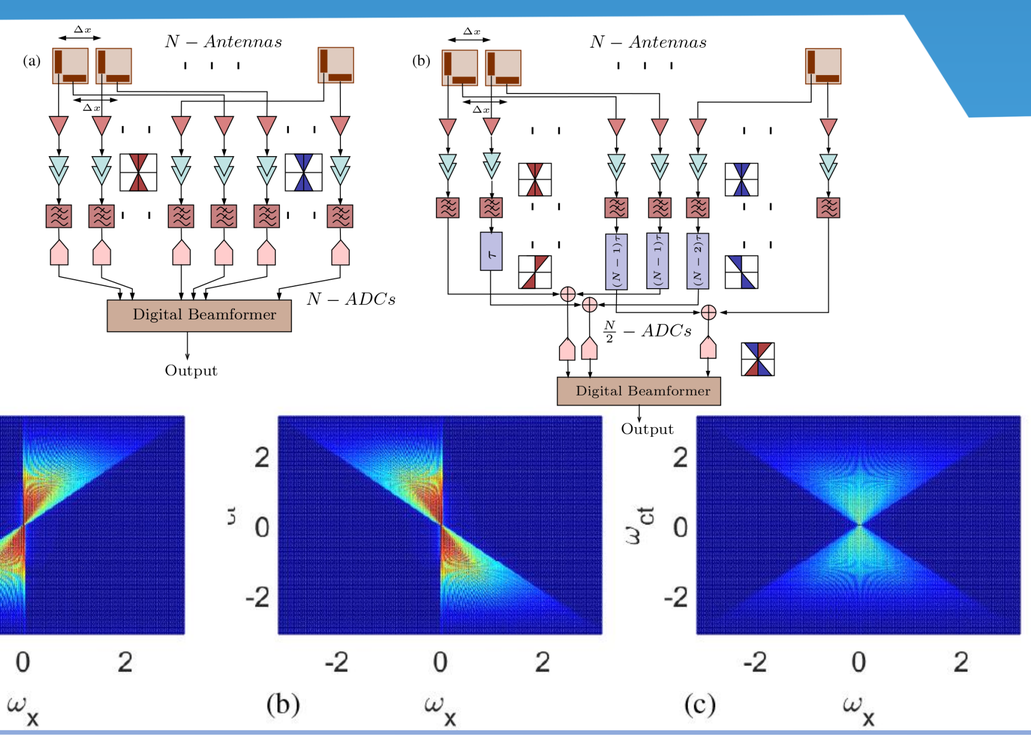

Implementation on three array system

Each array observes same two signals in the spatio-temporal domain.

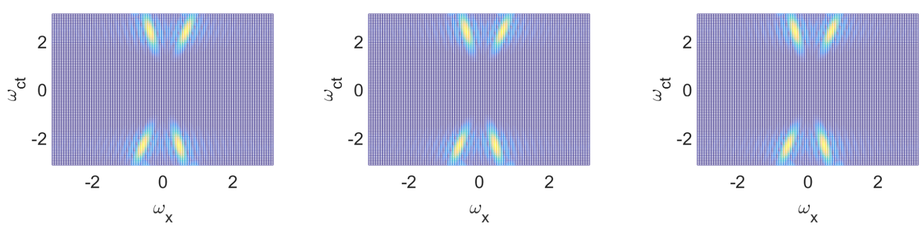

N elements antenna array

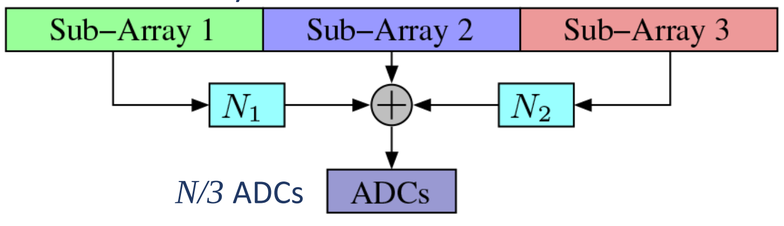

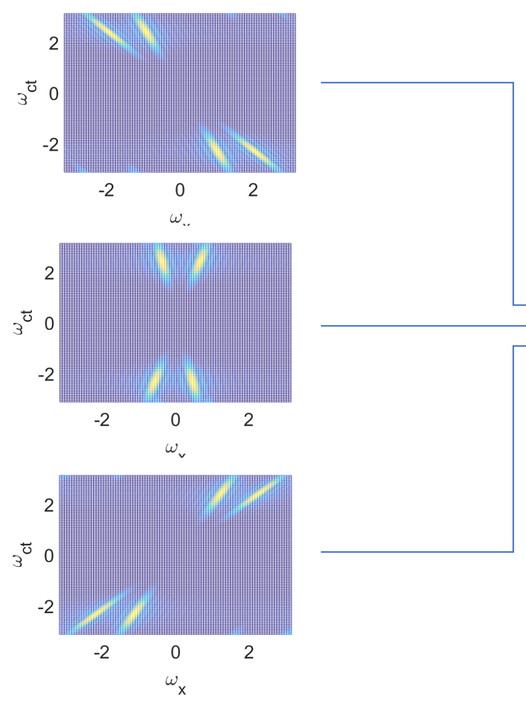

2D spatio-temporal representation of summed signals from all three networks.

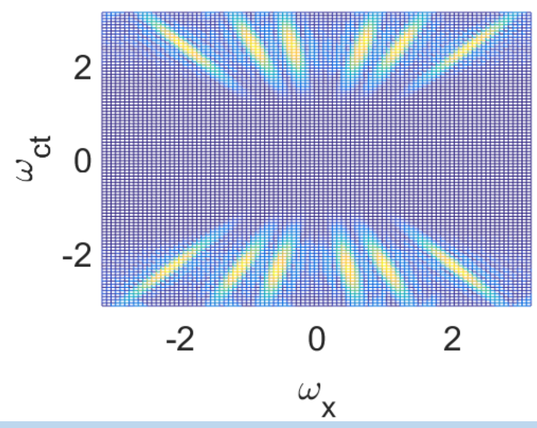

References
- A. Madanayake, N. Akram, L. Belostotski, "Sampling H- & V-Polarized Antennas using a Single ADC for Digital Antenna Arrays by Exploiting Multi-Dimensional Signal Processing RF Circuits," IEEE 23rd International Conference on Digital Signal Processing, Nov 2018.
- https://www.mwrf.com/components/correcting-loss-phased-array-antenna-elements [Online]